Est. Cost $_____

HI# _____ Exp Date _____

GENERAL LAND USE CHECKLIST
TOWN OF WILTON, CONNECTICUT

Property Address	Parcel #	* **Tax Collector Approval**	**Date**
Applicant's Name	Applicant's Address	Phone #	**Year Built (verified)**
Property Owner's Name	Address	Phone #	Site Phone #

Description of Proposed Work: **INGROUND OR ABOVE GROUND POOL**

TO AVOID UNNECESSARY DELAYS, THE APPLICANT SHALL OBTAIN APPROVALS IN THE ORDER SHOWN BELOW, UNLESS OTHERWISE DIRECTED. THE APPLICANT SHALL BE RESPONSIBLE FOR PROVIDING ANY INFORMATION REQUIRED BY EACH DEPARTMENT. THIS REVIEW PROCESS FOR OBTAINING PERMITS MAY TAKE 3 TO 10 DAYS WITH ADDITIONAL TIME FOR SITE INSPECTIONS OR COMMISSION REVIEW IF NECESSARY.

APPROVALS REQUIRED

(Check here if): Well ____ Septic ____

SEQUENCE	NOTE: 8:00am to 10:00am only unless otherwise noted	CHECKED	PERMIT #
1 _____	**HEALTH DEPARTMENT**: Sanitarian 8:00am-10:00am **563-0174** Please bring **PLOT PLAN** showing existing structures **WELL AND SEPTIC SYSTEMS** and a **SITE PLAN** showing all proposed structures And their separating distance to well. ***See attached required application form.***	_____	_____ **(Fee Required)**
2 _____	**WETLANDS REVIEW**: Dir. Env. Affairs 8:00am-10:00am- **563-0180** Please bring **PLOT PLAN, KNOWN WETLANDS, LIMITS AND REPORTS, SITE PLAN**, showing existing features and general proposed Features including structures, grading and septic location.	_____	_____ Attach Plot Plan
3 _____	**EROSION AND SEDIMENT CONTROL**: P&Z 8:00am-10:00am **563-0180** Please bring **SITE PLAN** showing all proposed grading, structures, limit of disturbance, and E&S controls.	_____	_____ Attach Plot Plan
4 _____	**ZONING PERMIT**: Zoning Enf. Officer, 8:00am-10:00am **563-0185** Please bring **SITE PLAN** on a certified A-2 survey showing all existing and proposed structures. ***Foundation Form As-Built Required before pouring.***	_____	_____
_____	**FIRE MARSHAL APPROVAL**: Fire Marshal - **By Appt**. **834-6246** Initially bring **SITE PLAN, BUILDING PLANS or FLOOR PLANS**. This is a preliminary sign off certifying that the Fire Department has received the necessary plans/documents to do a complete review for approval.	_____	_____
_____	**PUBLIC WORKS** : Field Engineer, DPW/**By Appt**. **563-0153** Please bring plan showing proposed **driveway** and features within the road Right-of-way. For sewer/water bring appropriate drawings as required.	_____	_____
5 _____	**BUILDING DEPARTMENT**: Building Official, 7:30am-12:00pm **563-0177** **Please bring 2 sets of BUILDING PLANS showing floor plans, cross sections & elevations, ResCheck for additions, Letter of Authorization from owner, Home Improvement Number with expiration date, Workers Comp Cert., Tax Collector approval, and all other approvals required above**.	_____	_____ **(Fee Required)**

THE INFORMATION REQUESTED ABOVE IS PRELIMINARY AS ADDITIONAL MATERIAL MAY BE REQUIRED UPON FURTHER REVIEW OF THE PROJECT.

NO FINAL INSPECTION FOR A CERTIFICATE OF OCCUPANCY WILL BE ISSUED UNTIL THE FIRE MARSHAL, ZONING AND HEALTH DEPARTMENTS HAVE CONDUCTED FINAL INSPECTIONS AND THE BUILDING DEPARTMENT HAS RECEIVED APPROVAL DOCUMENTS

SWIMMING POOL BUILDING PERMIT REQUIREMENTS

1. **TWO SETS OF ENGINEERED PLANS.**

   <u>IN-GROUND POOLS</u> MUST BE STAMPED AND SIGNED BY A CT ENGINEER.

   <u>ABOVE GROUND POOLS</u> ENGINEERED PLANS BY POOL MANUFACTURER.

2. **TEMPORARY POOL FENCE AGREEMENT MUST BE SIGNED BY POOL CONTRACTOR.**

3. **POOL FENCING AGREEMENT MUST BE SIGNED BY OWNER.**

4. **WORKER'S COMPENSATION FORM NEEDED.**

5. **HOME IMPROVEMENT NUMBER WITH EXPIRATION DATE.**

7. **POOL HEATER SPECIFICATIONS.**

8. **SIGNED POOL ALARM AGREEMENT.**

9. **LETTER OF AUTHORIZATION FROM OWNER**

Rev. 2014

WILTON BUILDING DEPARTMENT

Building Official
Demolition Officer

Tel: 563-0177

TOWN HALL ANNEX
238 Danbury Road
Wilton, Connecticut 06897

Fax: 563-0284

2015

REQUIRED INSPECTIONS

A TWENTY FIVE DOLLAR ($25.00) RE-INSPECTION FEE WILL BE CHARGED IF NO ONE IS HOME AT THE TIME OF INSPECTION OR IF THE WORK IS NOT READY. BE ADVISED, IF YOU CALL FOR AN INSPECTION, MAKE SURE IT IS READY!

PLAN REVIEW HOURS 7:30a.m. - 10:00a.m. FOR BUILDING PERMITS
FIELD INSPECTIONS: 10:30a.m. – 12:00 and 1:00– 3:00p.m.

1. Steel and Bonding
2. Trenching for plumbing and electrical
3. Inspection of all inlet and outlet covers. **(Prior to filling pool with water)**
4. Potting Compound
5. Deck bonding
6. Final CERTIFICATE OF OCCUPANCY Requirements:
   A filter letter must be sent to the Health Department indicating the actual filter type installed and Zoning Compliance must be received by our office prior to scheduling a final Certificate of Occupancy inspection with the Building Department.

State of Connecticut
Workers' Compensation Commission

Please TYPE or PRINT IN INK

Rev. 10-12-2004

7B

Proof of Workers' Compensation Coverage when Applying for a Building Permit for the Sole Proprietor or Property Owner who WILL act as General Contractor or Principal Employer

Applicant for Building Permit

Name of Applicant for Building Permit _____

Property located at _____

in the City / Town of _____

Attest

If you are the owner of the above-named property or the sole proprietor of a business doing work on the site of the construction project at the above-named property and you WILL act as the general contractor or principal employer, you must provide proof of workers' compensation insurance coverage for all employees.

Complete this form and, if applicable, sign the Affidavit below in the presence of a Notary Public or a Commissioner of the Superior Court.

CHECK ONE (1) BOX ONLY, provide the appropriate information, and sign:

☐ **I am the OWNER** of the above-named property. I WILL act as the general contractor or principal employer and, as such, will submit proof of workers' compensation insurance coverage for all employees who are doing work on the site of the construction project at the above-named property.

Signature of OWNER Applicant _____

☐ **I am the SOLE PROPRIETOR** of a business doing work at the above-named property. I WILL act as the general contractor or principal employer and, as such, will submit proof of workers' compensation insurance coverage for all employees who are doing work on the site of the construction project at the above-named property.

Signature of SOLE PROPRIETOR Applicant _____

☐ **I am the OWNER** of the above-named property **or the SOLE PROPRIETOR** of a business doing work at the above-named property. I will not personally submit proof of workers' compensation insurance coverage, but I will attest to the following:

AFFIDAVIT

I hereby swear and attest that I will require proof of workers' compensation insurance for every contractor, subcontractor, or other worker before he or she does work on the site of the construction project at the above-named property in accordance with Section 31-286b of the Workers' Compensation Act.

Signature of OWNER or SOLE PROPRIETOR Applicant _____

Name of Business—*if applicable* _____

Federal Employer ID# (FEIN)—*if applicable* _____

Subscribed and sworn to before me this _____ day of _____ , 200 _____ .

Signature of Notary Public / Commissioner of the Superior Court _____

State of Connecticut
Workers' Compensation Commission

Please TYPE or PRINT IN INK

Rev. 10-12-2004

7A

Proof of Workers' Compensation Coverage when Applying for a Building Permit for the Sole Proprietor or Property Owner who WILL NOT act as General Contractor or Principal Employer

Applicant for Building Permit

Name of Applicant for Building Permit _____

Property located at _____

in the City / Town of _____

Attest

If you are the owner of the above-named property or the sole proprietor of a business doing work on the site of the construction project at the above-named property and you WILL NOT act as the general contractor or principal employer, you are not required to have workers' compensation insurance coverage.

CHECK ONE (1) BOX ONLY and complete the following:

☐ **I am the OWNER** of the above-named property. I WILL NOT act as the general contractor or principal employer.

Signature of OWNER Applicant _____

☐ **I am the SOLE PROPRIETOR** of a business doing work at the above-named property. I WILL NOT act as the general contractor or principal employer.

Name of Business _____

Federal Employer ID# (FEIN) _____

Signature of SOLE PROPRIETOR Applicant _____

WILTON BUILDING
DEPARTMENT

Building Official
Demolition Officer
Tel: 203-563-0177

TOWN HALL ANNEX
238 Danbury Road
Wilton, Connecticut 06897

Fax: 203-563-0284

LETTER OF AUTHORIZATION

To Whom It May Concern:

I hereby declare the following:

1. That I am the owner of the premises described as follows:

_____ _____
Street City State Zone

2. That _____ is duly authorized for and on behalf of the owner to execute an application for building, zoning, health and wetlands permits to enable him/her to obtain permits to complete construction of the following work _____

_____

_____

at the above site.

3. That _____ is hereby designated as the owner's representative with whom all town departments may deal with in respect to the work involved.

4. That this authorization also includes any and all electrical, plumbing, heating, and HVAC contractors doing work in conjunction with the above noted activity to obtain the appropriate sub permits.

Date: _____

Owner: _____ _____
Print Name Signature

WILTON BUILDING
DEPARTMENT

Building Official
Demolition Officer

TOWN HALL ANNEX
238 Danbury Road
Wilton, Connecticut 06897

Fax: 203-563-0284
Tel: 203-563-0177

February 2014

To Whom It May Concern:

RE: **INSTALLATION OF TEMPORARY POOL FENCING**

AS REQUIRED BY SECTION AG105.6, Appendix G of the INTERNATIONAL RESIDENTIAL CODE REGARDING TEMPORARY ENCLOSURES AROUND SWIMMING POOLS, THE FOLLOW REQUIREMENTS APPLY:

A TEMPORARY ENCLOSURE SHALL BE INSTALLED IN ACCORDANCE WITH SECTION AG105.6, PRIOR TO THE ELECTRICAL BONDING INSPECTION OF ANY INGROUND POOL.

I HAVE READ AND UNDERSTAND THE ABOVE CODE REQUIREMENT AND AGREE TO INSTALL THE POOL FENCE ON THE PROPERTY FOR WHICH I AM OBTAINING A BUILDING PERMIT.

_____
SIGNATURE OF CONTRACTOR

_____
ADDRESS OF PROPERTY WHERE POOL IS BEING INSTALLED

_____
DATE

NO FENCE – NO INSPECTION

SWIMMING POOLS

Town of Wilton
Building Department

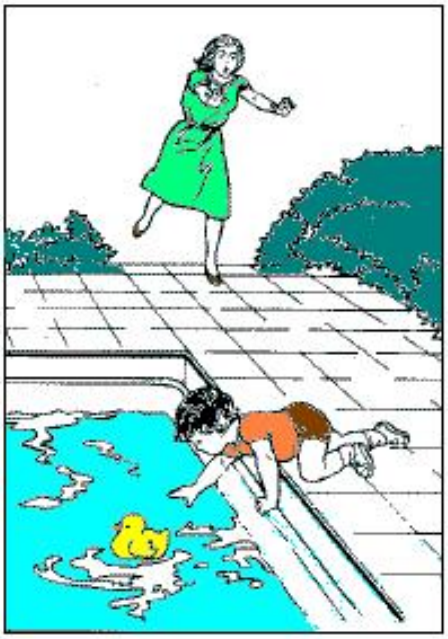

Text and Illustrations
Section AG105

The drawings contained in this brochure pertain to Appendix G of the 2009 International Residential Code along with the 2014 Amendment to the Connecticut Supplement. These drawings are for illustration purposes only. The written code text shall apply.

Rev. 2014

Guidelines for Residential Swimming Pools, Spas and Hot Tubs

State of Connecticut Building Code Appendix G

AG105.1 Application. The Provisions of this chapter shall control the design of barriers for residential swimming pools, spas and hot tubs. These design controls are intended to provide protection against potential drownings and near-drownings by restricting access to swimming pools, spas and hot tubs.

AG105.2 Outdoor swimming pool: An outdoor private swimming pool, including an in-ground, above ground or on-ground pool, hot tubs and spas shall be provided with a barrier which shall comply with the following:

1. The top of the barrier shall be at least ***48 inches (1219 mm)*** above grade measured on the side of the barrier that faces away from the swimming pool. The maximum vertical clearance between grade and the bottom of the barrier shall be ***2 inches (51 mm)*** measured on the side of the barrier which faces away from the swimming pool. Where the top of the pool structure is above grade, such as an above ground pool, the barrier may be at ground level, such as the pool structure, or shall be mounted on top of the pool structure. Where the barrier is mounted on top of the pool structure, the maximum vertical clearance between the top of the pool structure and the bottom of the barrier shall be ***4 inches (102 mm).***

2. Openings in the barrier shall not allow passage of a ***4 inch (102 mm) diameter sphere.***

3. Solid barriers that do not have openings, such as masonry or stone walls, shall not contain indentations or protrusions except for normal construction tolerances and tooled masonry *joints.*

4. Where the barrier is composed of a horizontal and vertical members and the distance between the tops of the horizontal members is less than ***45 inches (1143 mm)***, the horizontal members shall be located on the swimming pool side of the fence. Spacing between vertical members shall not exceed ***1-3/4 inches (44 mm)*** in width. Where there are Decorative cutouts within vertical or horizontal members, spacing within the cutouts shall not exceed ***1-3/4 inches (44 mm) in width***.

5. Where the barrier is composed of horizontal and vertical members and the distance between the tops of the horizontal members is ***45 inches (1143 mm)*** or more, spacing between the vertical members shall not exceed ***4 inches (102 mm)***. Where there are decorative cutouts within vertical members, spacing within the cutouts shall not exceed ***1-3/4 inches (44 mm) in width.***

6. Maximum mesh size for chain link fences shall be ***2-1/4 inches (32 mm) square*** unless the fence has slats fastened at the top or the bottom which reduce the openings to not more than ***1-3/4 inches (44 mm).***

7. Where the barrier is composed of diagonal members, such as lattice fence, the maximum opening formed by the diagonal members shall not be more than ***1-3/4 inches (44 mm).***

8. Access gates shall comply with the requirements of Section ***AG105.2, Items 1 through 7*** and shall be equipped to accommodate a locking device. Pedestrian access gates shall open outward away from the pool and shall be self-closing and have a self-latching device. Gates other than pedestrian access gates shall have a self-latching device. Where the release mechanism of the self-latching device is located less than ***54 inches (1372 mm)*** from the bottom of the gate: The release mechanism and openings shall comply with the following:

   8.1 The release mechanism shall be located on the pool side of the gate at least **3 inches (76 mm) below the top of the gate; and**

8.2 The gate and barrier shall not have an opening greater than **½ inch (13 mm) within 18 inches (457 mm)** of the release mechanism.

9. Where a wall of a *dwelling unit* serves as part of the barrier one of the following shall be met:

9.1 The pool shall be equipped with a power safety cover in compliance with ASTM F 1346; or

9.2 Doors with direct access to the pool through that wall shall be equipped with an alarm, which produces an audible warning when the door and/or its screen, if present, are opened. The alarm shall be listed and labeled in accordance with UL 2017. The deactivation switch(es) shall be located at least 54 inches (1372 mm) above the threshold of the door;

9.3 Other means of protection, such as self-closing doors with self-latching devices, which are *approved* by the governing body, shall be acceptable as long as the degree of protection afforded is not less than the protection afforded by Item 9.1 or 9.2 described above.

10. Where an above-ground pool structure is used as a barrier or where the barrier is mounted on top of the pool structure, and the means of access is a ladder or steps, the ladder or steps shall be surrounded by a barrier which meets the requirements of ***Section AG105.2. Items 1 through 9.***

AG105.3 Indoor swimming pool : All walls surrounding an indoor private swimming pool shall comply with ***Section AG105.2, Item 9.***

AG105.4 Prohibited locations: Barriers shall be located so as to prohibit permanent structures, *equipment* or similar objects from being used to climb them.

AG105.5 Barrier exceptions: Spas or hot tubs with safety cover which complies with ASTM F 1346, as listed in Section AG107, shall be exempt from the provisions of this appendix.

AG105.6 Temporary enclosure: A temporary enclosure shall be installed prior to the electrical bonding inspection of any in-ground swimming pool unless the permanent barrier specified in Section AG105.2 is in place prior to the commencement of the installation. The temporary enclosure shall be a minimum of 4 feet (1219 mm) in height, shall have no openings that will allow passage of a 4-inch sphere and shall be equipped with a positive latching device on any openings.

AG105.7 Pool alarm. Pursuant to Section 29-265a of the Connecticut General Statutes, no building permit shall be issued for the construction or substantial alterations of a swimming pool at a residence occupied by, or being built for one or more families unless a pool alarm is installed with the swimming pool. As used in this section "pool alarm" means a device which emits a sound of at least 50 decibels when a person or an object weighing 15 pounds or more enters the water in a swimming pool.

Exception: Hot tubs and portable spas shall be exempt from this requirement.

AG106.1 General. Suction outlets shall be designed and installed in accordance with ANSI/ASP-7.

I HAVE READ AND UNDERSTAND THE ABOVE CODE REQUIREMENTS AND AGREE TO INSTALL THE POOL FENCE AND REQUIRED POOL ALARM/SAFETY EQUIPMENT ON MY PROPERTY IN COMPLIANCE WITH THE ABOVE.

SIGNATURE OF HOMEOWNER _____ DATE: _____
ADDRESS OF PROPERTY WHERE POOL IS BEING INSTALLED _____

_____

SAMPLE DOOR ALARM

- UL Approved Door Alarm
- Important Safety Feature
- Complies With Building Codes
- Simple To Operate
- Automatic Reset
- Battery Powered
- Easy To Install
- Affordable Price
- Pass Through Feature For Adults
- Low Battery Indicator
- Use As Window Alarm
- 4-3/4” tall, 3-1/2” wide and 1-3/4” deep

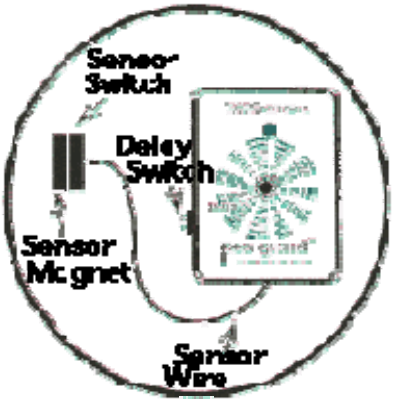

This **DOOR ALARM** is UL listed, UL #2017.

The alarm sounds if a child goes through the door even if he closes the door behind him.

The alarm is always on and always automatically resets under all conditions.

There is no on/off switch.

This style **DOOR ALARM** will sound in 7 seconds if a child opens the door, and will continue to sound until someone comes to the door.

The alarm has a delay switch for adults to exit and enter <u>without</u> the alarm sounding.

The horn is 98dB at 10 feet.

The horn sound is different than others in house alarms.

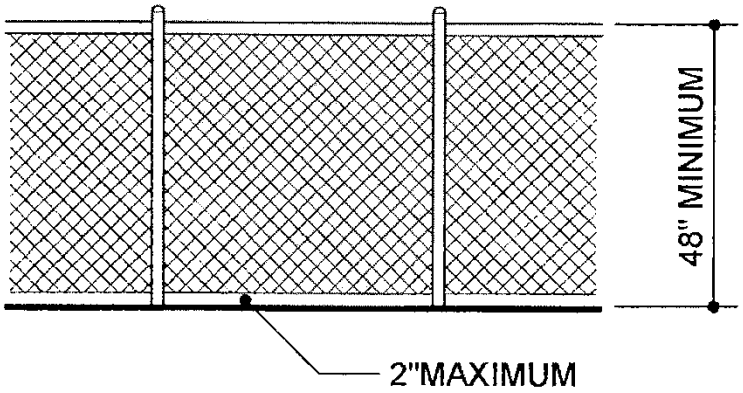

ELEVATION

OUTSIDE OF THE POOL ENCLOSURE

SECTION AG105.2, ITEM 1

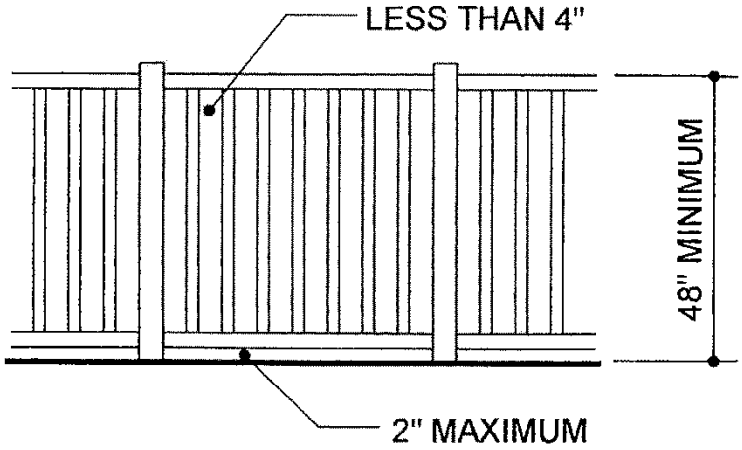

ELEVATION

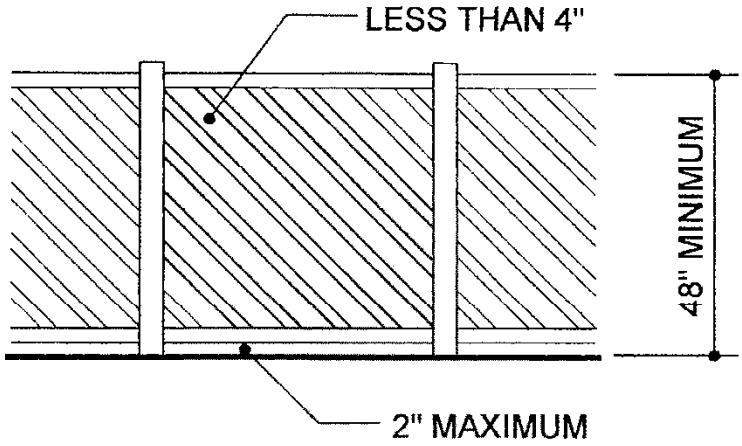

ELEVATION

SECTION AG105.2, ITEM 2

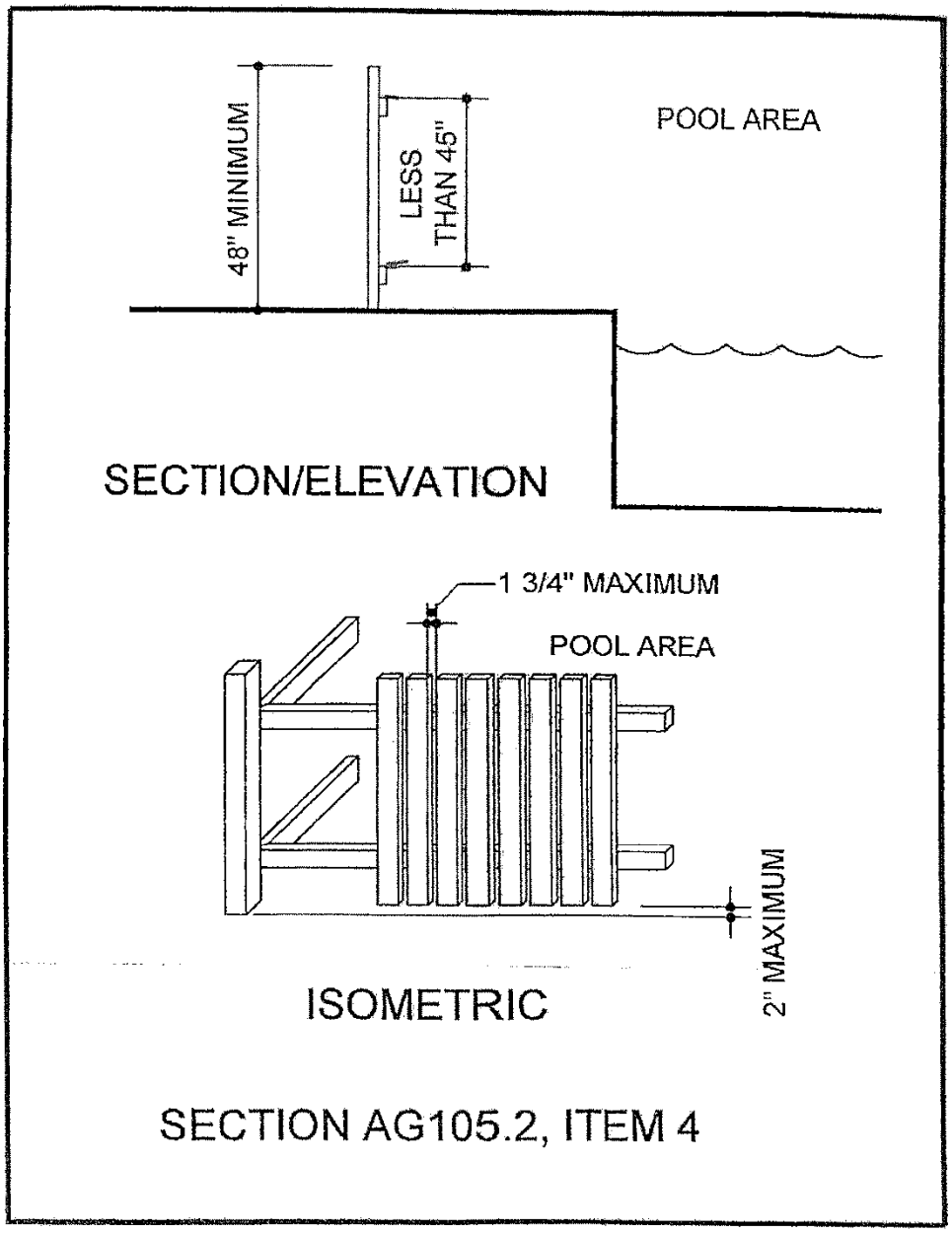

SECTION AG105.2, ITEM 4

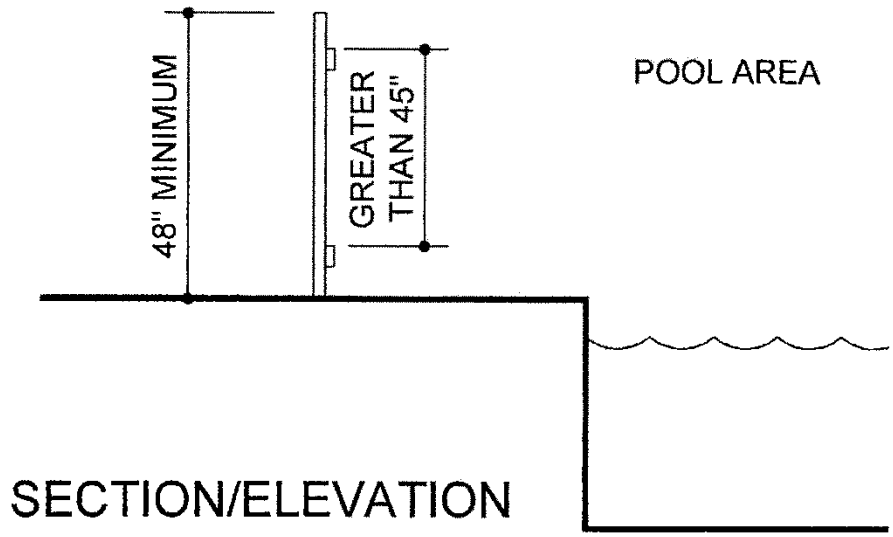

SECTION/ELEVATION

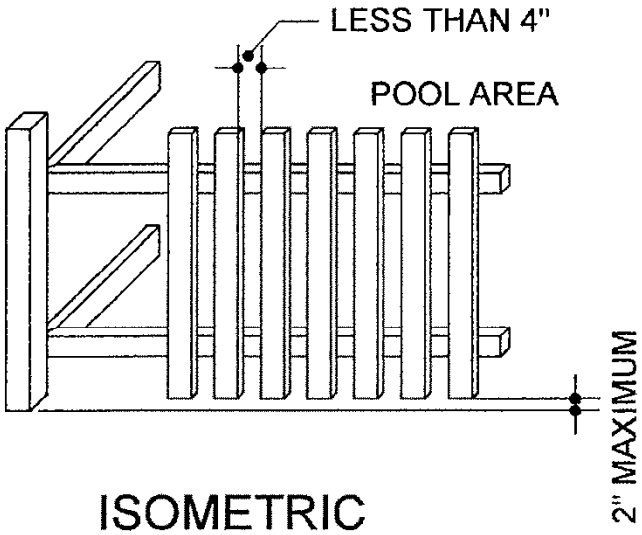

ISOMETRIC

SECTION AG105.2, ITEM 5

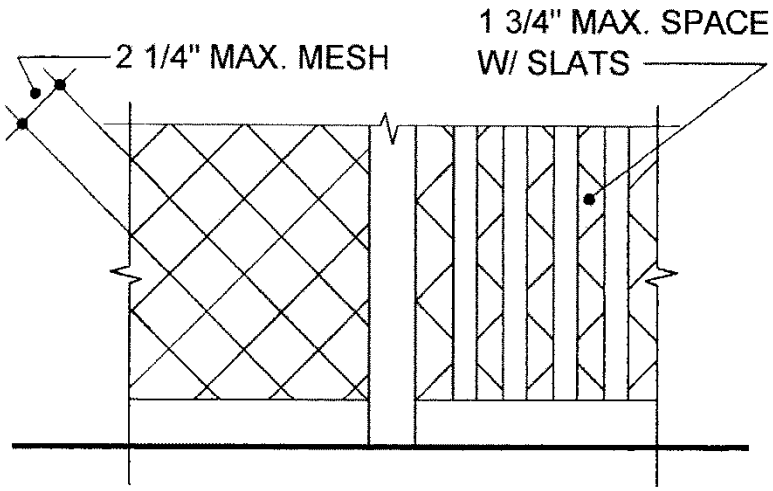

CHAIN LINK FENCE

SECTION AG105.2, ITEM 6

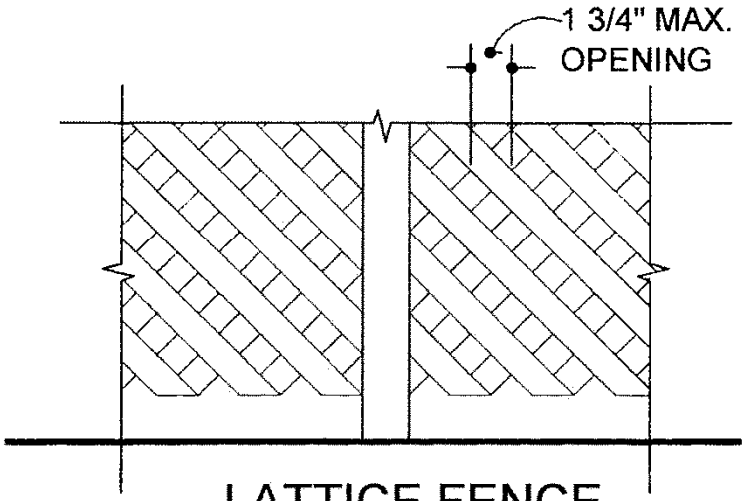

LATTICE FENCE

SECTION AG105.2, ITEM 7

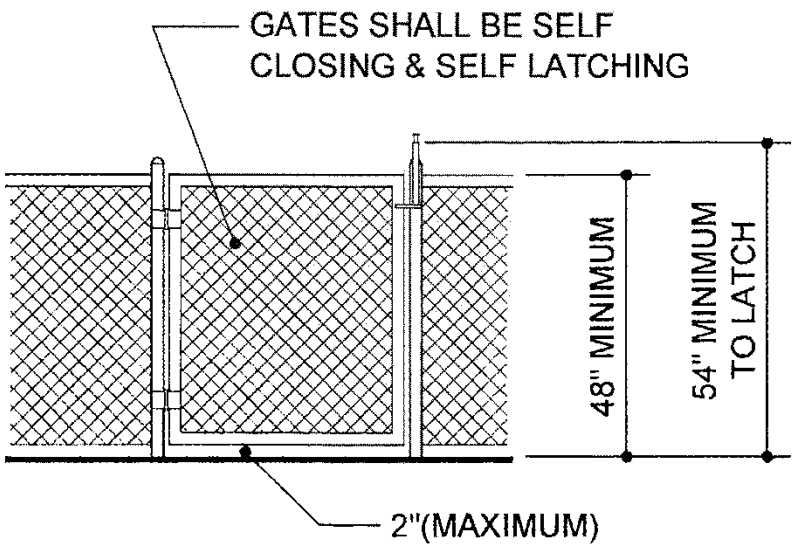

ELEVATION

PEDESTRIAN ACCESS GATE

SECTION AG105.2, ITEM 8

Wilton Health Department

Barrington A. Bogle, RS MPH CHES
DIRECTOR OF HEALTH
Barry.Bogle@wiltonct.org

Jennifer M. Zbell, RS
SANITARIAN
Jennifer.Zbell@wiltonct.org

Town Hall Annex

238 Danbury Road
Wilton, CT 06897
P-203-563-0174
F-203-563-0148

Application for Bldg Additions /Accessory Structure/Pools/Spas/Tennis Courts.

Fee: $150.00
Shed: $50

Property Owner: _____ Phone # :_____
Address: _____ E-mail:_____
Contractor/Applicant_____ Phone #:_____
Address: _____ E-mail: _____

TYPE OF PROPOSAL (check where appropriate)

__ ***Building Conversion, Change in Use:*** (describe) _____

__ ***Building Addition:*** (describe) _____

_____

a.) Will the proposal change the building "footprint"? __ yes __ no.
b.) Number of bedrooms in existing structure_____ Number of bedrooms after addition_____

__ ***Detached Structure*:** __ Barn; __Garage; __Gazebo; __Pool House; __Other (describe)_____
Plumbing ☐ YES ☐ NO Heating ☐ YES ☐ NO

__ ***Swimming pool:*** __In-ground __ Above ground Deck provided __Yes __No
Type of filter system: _____Filter backwash & pool water discharge to:_____

__***Building Teardown, Replacement*** using existing foundation _____ new foundation_____
a.) Number of bedrooms in existing house____ Number of bedrooms in proposed house_____

****

Please check: __Full Foundation __ Frost Wall __ Slab __ Piers __ Other Footing Drains: Yes / No

Distance of proposed from **septic tank** _____ ft.; **Leaching system** _____ ft.; **Well** _____ft.
Size of septic tank: _____ gallons Size of leaching system _____sq. ft.
Year septic system was installed_____
Any sewage backups or other problems noted with the existing septic system? __Yes __ No
If yes, please describe _____

Provide a plan showing the location of the proposal relative to the septic system and well.

Applicant signature: _____ **Date**: _____
I certify that I am the owner or the owner's contractual representative and that the information above is accurate to the best of my knowledge.

****

(FOR OFFICE USE ONLY)
Soil Testing Required: YES/ NO B100 (a) review needed: YES/NO Engineers Plan Required YES/NO

APPROVED_____**DENIED**_____**Date:**_____

COMMENTS: _____

2015